MATH 306 MID-TERM REVIEW 2014-15

1. Which of the following is the solution to

$$4x + 15 = 47$$

A) $x = 15.5$

C) $x = 58$

B) $x = 8$

D) $x = 28$

2. Simplify the expression

$$\frac{30x^5y^8 - 18x^8y^4 + 6x^2y^6}{6x^2y^4}$$

A) $3x^9y^6$

C) $5x^{2.5}y^2 - 3x^4y + xy^{1.5}$

B) $5x^xy^4 - 3x^6y + xy^2$

D) $5x^3y^4 - 3x^6 + y^2$

3. Simplify the following expression $\frac{(x^5y^3)^4}{x^4y^8}$

A) $x^{16}y^4$

C) $\frac{x^5}{y}$

B) $x^{13}y^{20}$

D) x^4y^4

4. Christopher is participating in a hot dog eating contest. Before the contest began he consumed a certain number of hotdogs for lunch. The table below shows the total number of hotdogs he has eaten all day.

Time(minutes)	2	4	18
Hotdogs Consumed	6	11	46

If he has 30 minutes to consume hot dogs and continues at this rate, how many total hot dogs will he have eaten?

m = 2.5 b = 1 y = 2.5x + 1 y = 2.5(30) + 1 = 76

He will have eaten 76 total hot dogs.

5. To help with the study of pyramids, your teacher asks you to construct the pyramid shown in the sketch below.

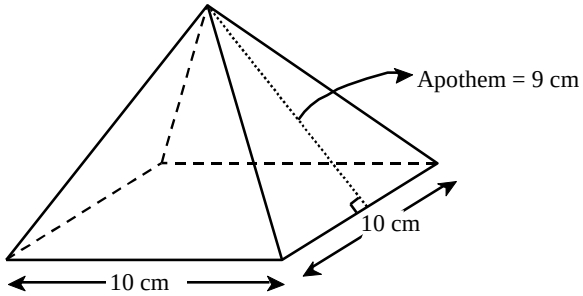

What surface area of cardboard would be needed to make this pyramid?

A) 180 cm^2

C) 360 cm^2

B) 280 cm^2

D) 460 cm^2

6. Place the following units in order from LEAST to GREATEST area

W	X	Y	Z
2500 dm^2	175 000 cm^2	3 920 000 mm^2	0.9 dam^2

A) Z - W - X - Y

C) Y - X - Z - W

B) Y - X - W - Z

D) Y - X - W- Z

7. What is the total surface area of this prism**?**

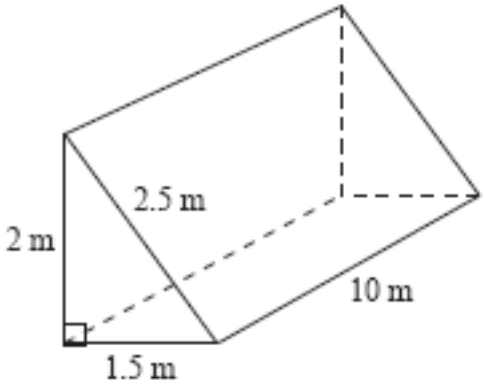

At = 2Ab + Al
At = 2(bxh)/2 + Pbxh
At = 2(2x1.5)/2 + 6x10
At = 3 + 60
At = 63 m^2

8. Solve each inequality, and write each answer using interval (bracket) notation.

a) $5x + 9 < 2x + 24$

$3x + 9 < 24$

$3x < 15$

$x < 5$

$]-\infty,5[$

b) $4x - 14 \leq 10x + 16$

$-6x - 14 \leq 16$

$-6x \leq 30$

$x \geq -5$ (switch direction of sign)

$[-5, \infty[$

9. Sam has been hired as a tree planter in British Columbia for the summer. When she arrives on a new site, a certain number of trees have already been planted. After 2 hours, a total of 111 trees have been planted, while after 14 hours there are now 159 trees.

What is the **RULE** that describes the number of trees planted as a function of time?

m = (Y2-Y1)/(X2-X1) = (159-111)/(14-2) = 48/12 = 4 trees / hour

b = y – mx = 159 – 4(14) = 159 – 56 = 103 trees

y = 4x + 103

10. Graph the following equations. **Label** each equation on your graph.

A) $y = -x + 4$

B) $y = \frac{1}{4}x - 3$ C) $y = \frac{1}{4}x - 3$

D) $y = \frac{1}{2}x - 3$

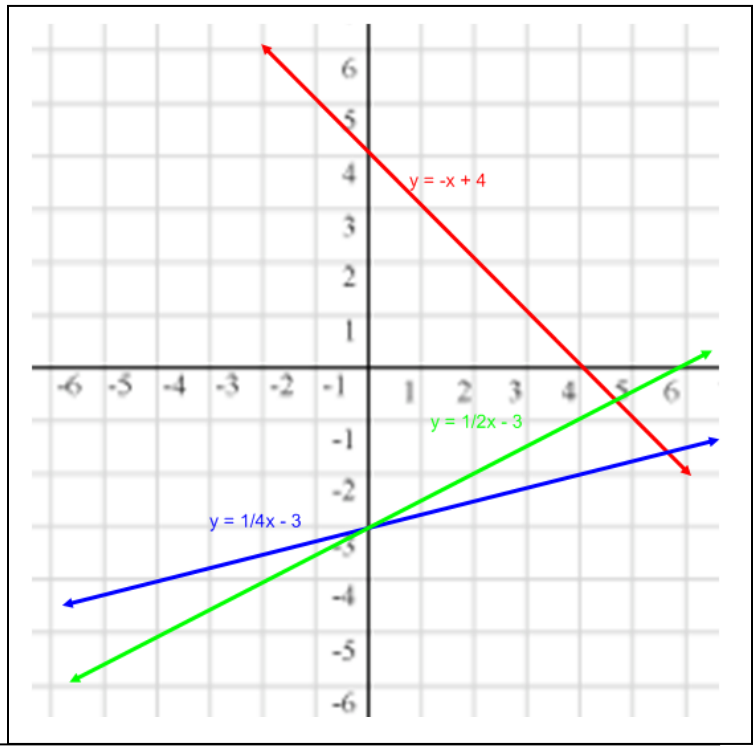

11. POOL MAINTENANCE

Kate has to empty her hot tub to do some maintenance. The hot tub has 1500 litres of water initially, and Kate has attached a pump that removes the water at a rate of 75 litres / minute.

Kate's son Henry doesn't want to be left out of the fun! He has a small inflatable pool, and he tries to race his Mom by using a foot pump to empty it. After 3 minutes his pool had 192 litres of water. After 8 minutes, the pool had 112 litres of water.

If they begin both pumps at the same time, does the hot tub or pool empty first?

Let y represent the amount of water in the pool / hot tub
Let x represent the number of minutes since filling started

Yk = -75x + 1500
0 = -75x + 1500
75x = 1500
x = 20 minutes

Henry's pool:
m = (Y2-Y1)/(X2-X1) = (112-192)/(8-3) = -80/5 = -16L/minute
b = y – mx = 192 – (-16)(3) = 192 + 48 = 240 L

Yh = -16x + 240
0 = -16x + 240
16x = 240
x = 15 minutes

The pool will empty first.

14. PATTERNS

Once simplified, these expressions form a pattern.

1st Expression	$(3x-2)(2x+2)-2(3x^2-2)$	
2nd Expression	$\frac{4x^4x^6}{(x^2)^4}$	
3rd Expression	$\frac{64x^4+16x^2+8x}{8x}-\frac{10x^2+5x}{5x}$	
4th Expression	$\frac{?}{2x}$	

What is the missing numerator (?) in the 4th expression?

1st expression: $6x^2 + 6x - 4x - 4 - 6x^2 + 4 = 2x$

2nd expression: $\frac{4x^4x^6}{(x^2)^4} = \frac{4x^{10}}{x^8} = 4x^2$

3rd expression: $8x^3 + 2x + 1 - 2x - 1 = 8x^3$

Pattern: coefficient doubles and the exponent on x increases by 1

4th expression: $16x^4$

? = $32x^5$

12. SOUTHWARD BOUND

Chloe's parents have surprised her with a trip for her 16th birthday. Her dream is to visit the Carmen del Playa resort in Cancun, Mexico. Chloe has done her research and found rates from two travel agencies for the resort she really wants.

Here is the information she was given.

Agency A: Go Travel Direct

# of days	Amount in dollars $
2	350
3	525
6	1050
10	1750

Agency B: Sun Lover's Paradise

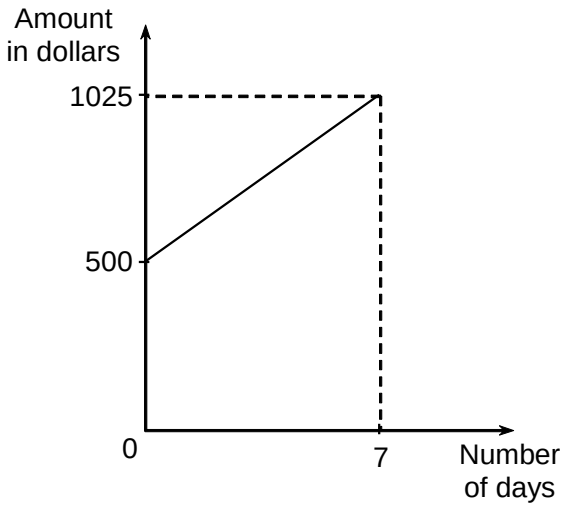

Go Travel will give Chloe a free t-shirt if she can determine when Agency A and B cost the exact same amount.

Agency A;

m = (Y2-Y1)/(X2-X1) = (525/350)/(3-2) = 175/1 = $175/day

b = y – mx = 350 – 175(2) = 350 – 350 = 0

ya = 175x

Agency B:

m = (Y2-Y1)/(X2-X1) = (1025-500)/(7-0) = 525/7 = $75/day

yb= 75x + 500

To find when the cost is the same:

ya = yb

175x = 75x + 500
100x = 500
x = 5

ya = 175(5) = $875
yb = 75(5) + 500 = $875

Agency A and Agency B will both have a cost of $875 after 5 days on vacation.

13. a) Calculate the lateral surface of the decomposable solid below.

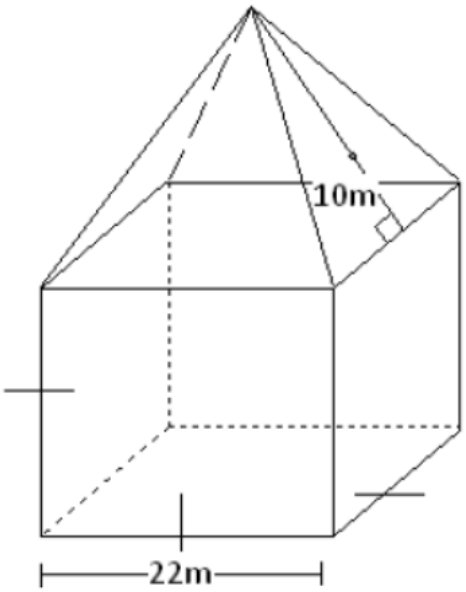

Pyramid:
AL =(Pb x SL)/2
AL = 88 x 10 / 2
AL = 880/2
AL = 440 m²

Cube:
AL = Pb xh
AL = 88 x 22
AL = 1936 m²

Total lateral surface area = 1936 + 440 = 2376 m²

b) Calculate the total surface area of the decomposable solid below.

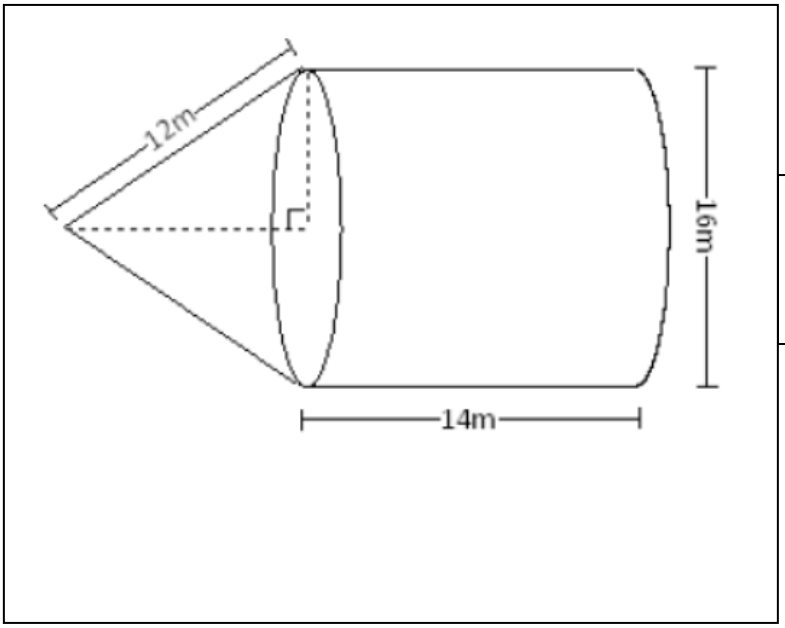

Cone:
AL = 2 π rSL
AL = 2(3.14)(8)(12)
AL = 602.88 m²

Cylinder:
Ab = πr^2
Ab = 3.14(8)²
Ab = 200.96 m²

AL = 2 πrh
AL = 2(3.14)(8)(14)
AL = 703.36 m²

Total surface area = 602.88 + 200.96 + 703.36 = 1507.2 m²

15. PAVING THE DRIVEWAY

A new neighbourhood is being constructed in the Plateau, just behind the school. Two condo buildings have large parking lots, both with the same perimeter. The first parking lot is being paved with asphalt, with a cost of \$40 / m^2. The second parking lot will use paving stones, with a cost of \$75 / m^2.

What is the cost to pave each parking lot?

Parking Lot #1

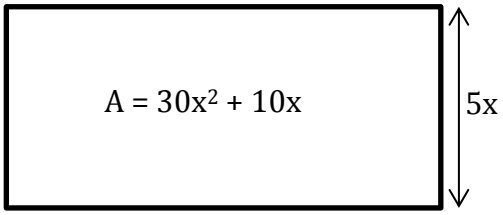

Parking Lot #2

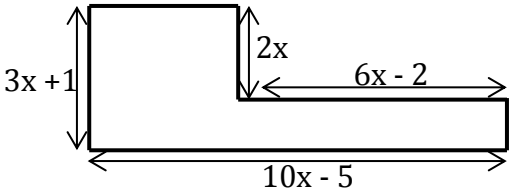

Parking lot #1:

A = l x w

L = A/w

L = 6x + 2

P = 2(6x+2) + 2(5x)

P = 12x + 4 + 10x

P = 22x + 4

Parking lot #2:

P = 2(3x+1) + 2(10x-5)

P = 6x + 2 + 20x -10

P = 26x - 8

Since the perimeters are equal:

22x + 4 = 26x – 8

-4x = -12

x = 3

Parking lot #1:

L = 6(3) + 2 = 20 m

W = 5(3) = 15 m

A = L x W = 300 m²

Cost = 300 x 40 = \$12000

Parking lot #2:

L = 10(3) – 5 = 30 – 5 = 25 m

W = 3(3) + 1 = 9 + 1 = 10 m

l = 6(3) – 2 = 16 m

w = 2(3) = 6m

A = L x W – l x w = 25 x 10 – 16 x 6 = 250 – 96 = 154 m²

Cost = 154 x 75 = \$11,550

16. 30º-60º-90º TRIANGLES

In a 30º-60º-90º triangle, the length of the hypotenuse is exactly twice the length of the shorter leg of the triangle. Several examples are shown below.

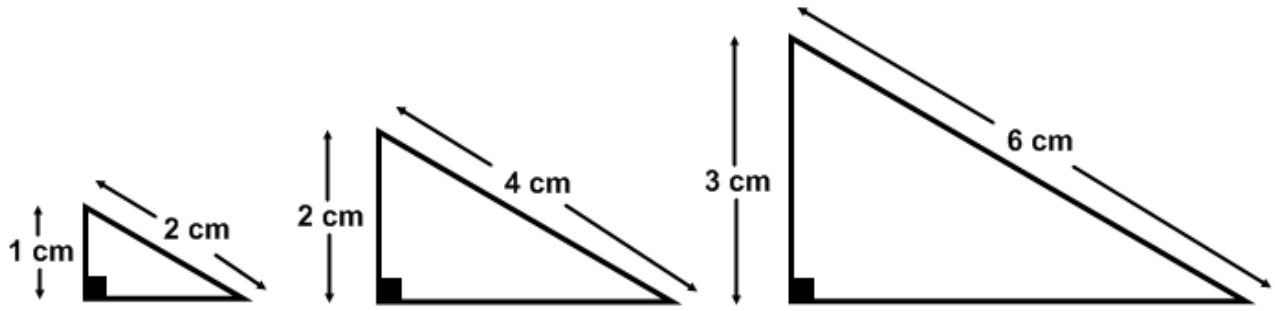

Formulate a conjecture regarding the ratio between the lengths of the two legs of a 30º-60º-90º triangle, such as the ones above.

Triangle #1:	Triangle #2:	Triangle #3:
$a^2 + b^2 = c^2$	$a^2 + b^2 = c^2$	$a^2 + b^2 = c^2$
$1^2 + b^2 = 2^2$	$2^2 + b^2 = 4^2$	$3^2 + b^2 = 6^2$
$1 + b^2 = 4$	$4 + b^2 = 16$	$9 + b^2 = 36$
$b^2 = 3$	$b^2 = 12$	$b^2 = 27$
$b = 1.73$	$b = 3.46$	$b = 5.2$
Ratio = 1.73/1 = 1.73	Ratio = 3.46/2 = 1.73	Ratio = 5.2/3 = 1.73

Conjecture: The ratio between the lengths of the two legs of a 30º-60º-90º triangle is 1.73.